Chapter 32 Hardware

This chapter describes the **Hunter 16** hardware in sufficient detail to enable you to write programs to control the hardware directly, if you are familiar with standard IBM PC hardware. It will also help you anticipate or diagnose any problems with using software produced for a standard IBM PC-compatible.

It does not provide sufficient information for you to design internal hardware or modify **Hunter 16** hardware. For this level of information, contact Husky Computers Ltd.

For details of the ways that the hardware and software integrate to create subsystems and example code, see Chapter 33 to Chapter 42.

For pinouts and other interfacing information, see Appendix G.

32.1 Organisation

The **Hunter 16** hardware has been designed to satisfy two rather disparate aims:

1. Provide the hardware environment of a bulky, AC-powered desktop computer, so that programs and peripherals designed for the IBM PC can be used.
2. Provide the convenience of hand-held operation, in a wide variety of working conditions.

These very ambitious aims have been largely realised, by using miniaturised low-power versions of standard circuitry wherever possible and emulating devices where such devices are not available.

This emulation is performed automatically at a very low level, so that compatibility is not compromised under normal circumstances. Certain device characteristics have not been emulated, for a variety of reasons. These are indicated in the appropriate sections.

The configuration emulated is an IBM PC-XT with CGA graphics adaptor:

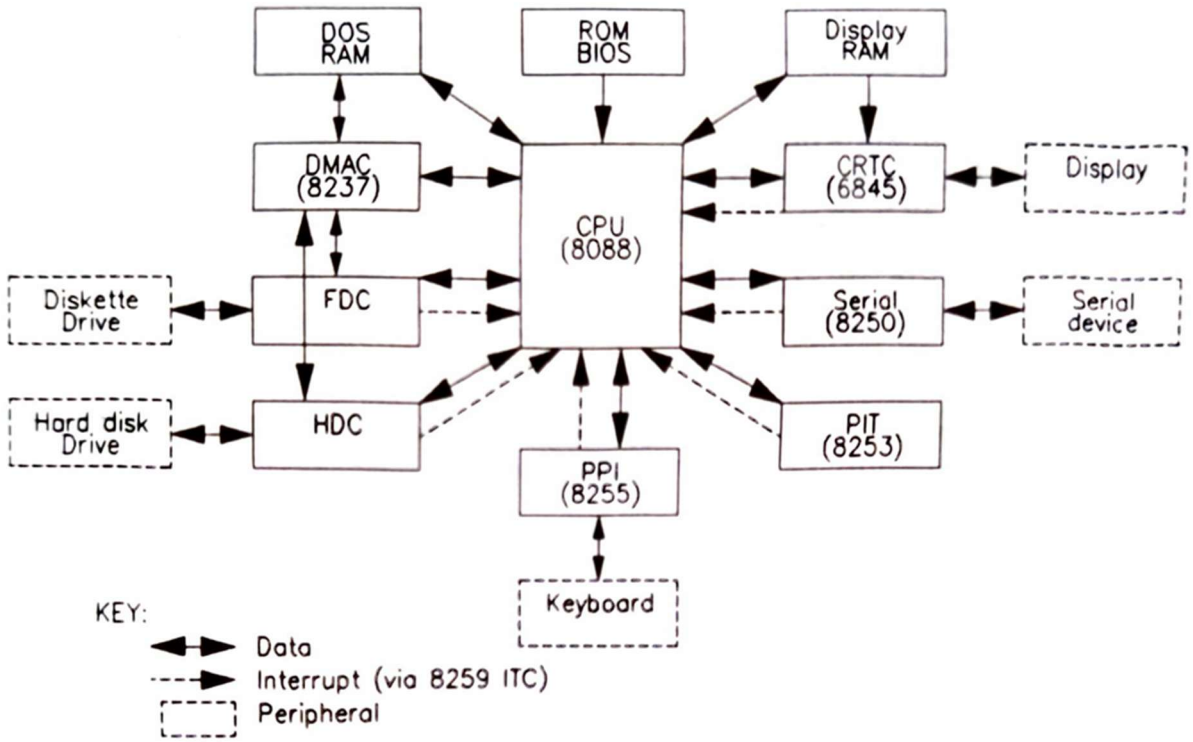

These devices are linked by compatible address and data buses, and controlled via compatible hardware interrupts and BIOS.

The **Hunter 16** design also includes a number of non-standard devices, namely the LCD, electroluminscent backlight, LCD contrast adjustment and power regulation and monitoring system. There is little or no advantage in direct access to these devices, so their hardware implementation will not be described here; use the BIOS interrupts to access these devices (see Chapter 18).

The memory map, hardware interrupts and device emulation details are described in this chapter. For many purposes, the facilities provided by BIOS interrupts will be more convenient (these are summarised in Chapter 18 and detailed in Chapter 19 to Chapter 31).

32.2 Memory Maps

The 8088-compatible processor used by Hunter 16 can only address 1MB of memory (00000H...FFFFFH). This is its logical memory map. (In fact, MS-DOS only allows applications to load into the first 640 KByte of this memory (00000H...9FFFFH). This area is usually called the main memory or DOS memory.)

Hunter 16 can actually address much more memory than this: up to S12 MByte. This is its physical memory map. To access all this additional memory, the processor must map it into the logical memory map, by a process called paging. This is used to implement the RAM and ROM disks, and EMS memory.

Hunter 16 also implements IBM PC-compatible I/0 addresses.

32.2.1 Logical memory map

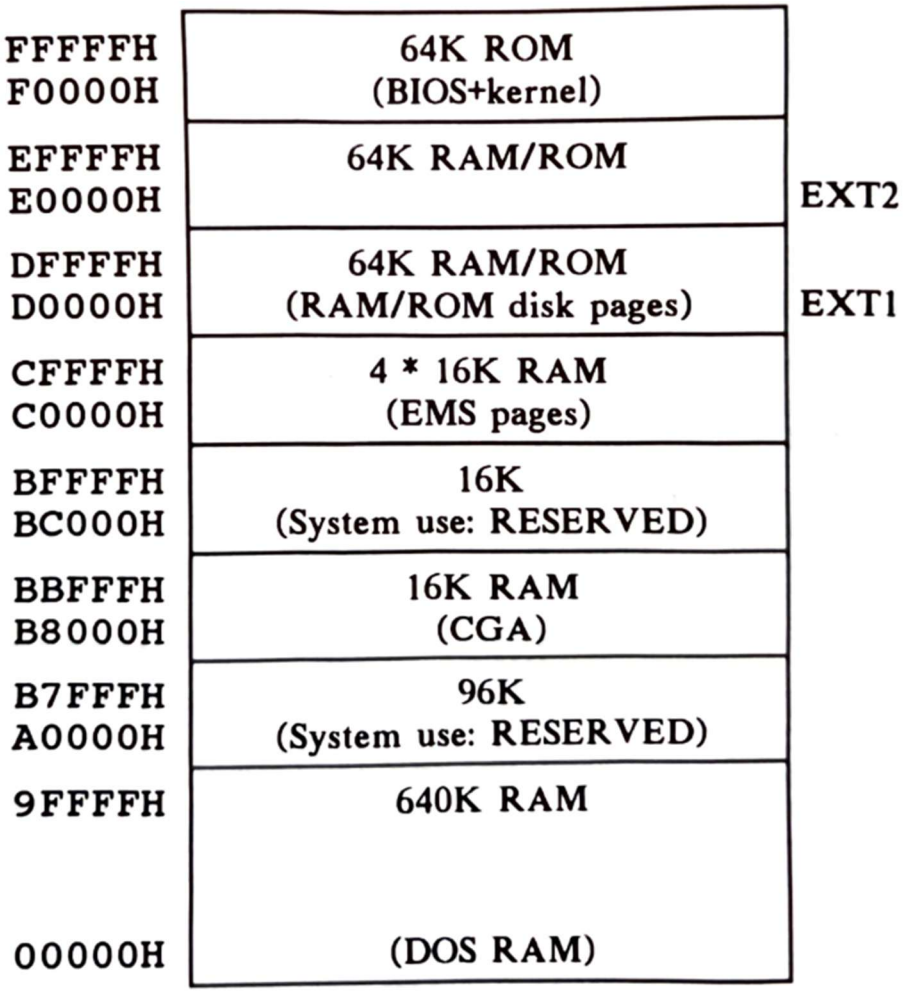

Note that the following areas are reserved for system use and must NOT be written to directly:

E0000...EFFFF
D0000...DFFFF
BC000...BFFFF
A0000...B7FFF

If you require information about these areas, contact Husky Computers Ltd for details.

32.2.2 Physical memory map

The physical memory map includes all **Hunter 16's** memory-mapped components, including options such as communications and memory expansion modules. Access to these facilities is provided automatically, as and when required, so you do not need information about the physical memory map to use or program **Hunter 16**.

If you have an application which requires more information about the physical memory map, approach Husky Computers Ltd directly.

32.2.3 I/O addresses

An IBM PC only uses I/O addresses 0-3FFH, and these are implemented similarly on **Hunter 16**. **Hunter 16** also uses other I/O address, but applications MUST NOT use these!

The following table summarises all the legal I/O operations that can occur on an IBM PC, and indicates those areas which are not fully compatible on **Hunter 16**. For more details of the individual devices, see section 32.4.

DMA Controller			
Address	**Operation**	**Context**	**Compatible?**
000..00F	Read		NO (ignored)
	Write		NO (ignored)

Interrupt Controller (ITC)			
Address	**Operation**	**Context**	**Compatible?**
020	Read		YES
	Write	Bit 4 set	No (ignored)
		Bit 4 reset	YES
021	Read		YES
	Write		YES

Timer			
Address	**Operation**	**Context**	**Compatible?**
040	Read		YES
	Write	RL=0	No (ignored)
		RL=1..3	YES
041	Read		No (ignored)
	Write		YES (no effect on IBM)
042	Read		YES
	Write	RL=0	No (ignored)
		RL=1..3	YES
043	Read		YES (no effect on IBM)
	Write		YES

PPI			
Address	**Operation**	**Context**	**Compatible?**
060	Read		YES
	Write		YES (no effect on IBM)
061	Read		YES (no effect on IBM)
	Write		YES
062	Read		YES
	Write		YES (no effect on IBM)
063	Read		YES (no effect on IBM)
	Write		NO (ignored)

DMA Controller			
Address	**Operation**	**Context**	**Compatible?**
080..083	Read		YES (no effect on IBM)
	Write		YES (no effect on IBM)

NMI Mask			
Address	**Operation**	**Context**	**Compatible?**
0A0	Read		YES
	Write		NO

Printer			
Address	**Operation**	**Context**	**Compatible?**
378..37A			NO (ignored)

RS232 Port 2			
Address	**Operation**	**Context**	**Compatible?**
2F8	Read		YES
	Write		YES
2F9	Read		YES
	Write	DLAB=0	YES
		DLAB=1	NO (bit 3 ignored)
2FA	Read		NO (bit 3 ignored)
	Write		YES (no effect on IBM)
2FB	Read		YES
	Write		NO (bit 6, 5 ignored)
2FC	Read		YES
	Write		NO (bit 3,2 ignored)
2FD	Read		YES
	Write		YES (no effect on IBM)
2FE	Read		NO (ignored)
	Write		YES (no effect on IBM)

Colour Graphics Adaptor (CGA)			
Address	**Operation**	**Context**	**Compatible?**
3D0	Read		YES
	Write		YES
3D1	Read	Index=14..15	YES
		Index=other	NO (ignored)
	Write	Index=10..15	YES
		Index=other	NO (ignored)
3D2 – as 3D0			
3D3 – as 3D1			
3D4 – as 3D0			
3D5 – as 3D1			
3D6 – as 3D0			
3D7 – as 3D1			
3D8	Read		YES (no effect on IBM)
	Write		YES
3D9	Read		YES (no effect on IBM)
	Write		NO (ignored)
3DA	Read		YES
	Write		YES (no effect on IBM)
3DB	Read		YES (no effect on IBM)
	Write		NO (ignored)
3DC	Read		YES (no effect on IBM)
	Write		NO (ignored)

Diskette Controller			
Address	**Operation**	**Context**	**Compatible?**
3F2			NO (ignored)
3F4			NO (ignored)
3F5			NO (ignored)

RS232 Port 1			
Address	**Operation**	**Context**	**Compatible?**
3F8	Read		YES
	Write		YES
3F9	Read		YES
	Write	DLAB=0	YES
		DLAB=1	NO (bit 3 ignored)
3FA	Read		NO (bit 3 ignored)
	Write		YES (no effect on IBM)
3FB	Read		YES
	Write		NO (bit 6, 5 ignored)
3FC	Read		YES
	Write		NO (bit 3,2 ignored)
3FD	Read		YES
	Write		YES (no effect on IBM)
3FE	Read		NO (bit 3 ignored)
	Write		YES (no effect on IBM)

NOTE: I/O addresses are not fully decoded on an IBM PC, so they are "reflected' to higher addresses. For example, I/O address 100H could be specified as 100H, 500H, or 900H. **This is not the case on Hunter 16.**

32.3 Hardware Interrupts

The **Hunter 16** design includes the normal hardware interrupts, vectors and service routines for an IBM PC. For details, see section 18.1.

The design also includes a number of interrupts that are not present in an IBM PC, which are mainly concerned with the special requirements of a portable computer.

Since **Hunter 16** is not designed for internal expansion by third parties, the details of these interrupts are irrelevant to most third parties and will not be covered here. If you require this information, refer to the standard texts or contact Husky Computers Ltd.

Application programs can trap hardware interrupts (and other interrupts) by changing the vectors to point into their own code. For details, see section 18.1.

WARNING: You must not change vector 02H, which is responsible for servicing NMIs, as NMls are vital to operation of **Hunter 16**. If you change this vector, **Hunter 16** will cease to operate. YOU HAVE BEEN WARNED.

32.4 Device details

As already mentioned, to be considered IBM PC-compatible, a computer must use the same devices, or emulate them. **Hunter 16** takes the second option, as the devices used in the IBM PC could not be used to produce a convenient portable design.

This section describes the behaviour of the main devices and indicates where the behaviour of the emulations differs sufficiently to compromise compatibility. Where register is described unimplemented', any attempt at access will simply be ignored.

Note that compatibility extends even to low level access; you are not limited to access via the BIOS.

The microprocessor is entirely 8088-compatible, executing all published instructions. The ROM provides an IBM PC-compatible BIOS, with extensions to use **Hunter 16's** special features; the BIOS is described in Chapter 18 and Chapter 19 to Chapter 31. The RAM is standard, but can be partitioned into three areas: MS-DOS RAM, the RAM disk and EMS memory. These components will not be described further here.

The implementation of the other standard devices will now be described, in the following order:

- CGA (6845 and display RAM)
- 8255 (various
- 8253 (timer)
- 8250 (serial)
- Printer interface
- 8237 (DMA)
- 8259 (ITC)
- Disk controllers

For pinouts and other interfacing information, see Appendix G.

32.4.1 CGA and 6845 emulation (display)

The colour graphics adaptor consists of 16 KByte of display memory and seven registers:

Address	Name
3DO	6845 index register (also at 3D2, 3D4 and 3D6)
3D1	6845 data register (also at 3D3, 3D5 and 3D7)
3D8	Mode control
3D9	Colour select
3DA	Status
3DB	Clear lightpen latch
3DC	Preset lightpen latch

32.4.1.1 CGA RAM

The CGA RAM is 16 KByte from B8000H to BFFFFH. It is entirely standard, and will not be described further here, other than to remind you that on **Hunter 16**, there is no display 'snow' problem, so programs need not wait for the vertical retrace period before accessing the CGA RAM.

Also note that while the **Hunter 16** LCD can only display monochrome, all colour and attribute bits are implemented in the CGA RAM, to ensure compatibility.

32.4.1.2 6845 registers

The 6845 CRT controller is the core of the CGA. It has 19 internal registers, which are accessed by writing the internal register number to the 6845 index register, then reading or writing the 6845 data register.

The 6845 internal registers are implemented as follows:

Register	Access	Description	Implemented?
0	W	Horizontal total	N
1	W	Horizontal displayed	N
2	W	Horizontal sync	N
3	W	Horizontal sync width	N
4	W	Vertical total	N
5	W	Vertical total adjust	N
6	W	Vertical displayed	N
7	W	Vertical sync position	N
8	W	Interlace mode	N
9	W	Max scan line address	N
10	W	Cursor start	Y
11	W	Cursor end	Y
12	W	Start addr (H)	Y
13	W	End addr (H)	Y
14	R W	Cursor addr (H)	Y
15	R W	Cursor addr (L)	Y
16	R	Lightpen (H)	N
17	R	Lightpen (L)	N

The cursor start and end registers specify the size of the cursor by specifying which lines it starts and ends on. The cursor address registers specify the position of the cursor, as the character number (in the range 0..1999). Both these functions are also provided via INT 10H.

Standard texts advise that the other 6845 registers should not be accessed directly, so the fact that they are not emulated should not cause compatibility problems.

Bit	Effect	Implemented?
7	Not used	Y
6	Not used	Y
5	Enable blink	N
4	High resolution mode (640x200)	Y
3	Enable video	N
2	Select B&W	N
1	Select graphics	Y
0	Select 80x25 text	Y

32.4.1.4 Colour select register

The colour select register is not implemented, as **Hunter 16's** display is only monochrome.

32.4.1.5 Status register

The status register is a read-only register which returns the adaptor's status by setting individual bits as follows:

Bit	Significance	Implemented?
7	Not used	Y
6	Not used	Y
5	Not used	Y
4	Not used	Y
3	Vertical retrace	Y
2	Lightpen switch made	N
1	Lightpen trigger set	N
0	Display enabled	Y

Bits 0 and 3 change each time they are read, returning 1xx1, Oxx1, Ixx0, and then 0xx0 before the pattern repeats. Bit 0 is usually checked

by programs to time updates to the CGA RAM (to avoid display "snow'), but there is no snow' problem with the **Hunter 16** CGA.

32.4.1.6 Lightpen registers

The clear lightpen latch and reset lightpen latch registers are not implemented.

32.4.1.7 Character set

The Hunter 16 BIOS provides the full IBM character set in both text and graphics modes. The IBM PC BIOS only provides the full set in text modes; in graphics modes, characters 00H..7FH only are defined.

An application can replace the character definitions for ASCII 80..FFH used in graphics modes by changing the contents of vector 1FH (ie 0007CH..0007FH) to point to its own definition.

32.4.2 8255 emulation (various)

The 8255 is a Programmable Peripheral Interface chip, which is involved in the keyboard, sound and system status. It consists of four registers:

Address	Description	Implemented?
060H	Port A (i/p)	Y
061H	Port B (o/p)	Y
062H	Port C (i/p)	Y
063H	Control register	N

32.4.2.1 Control register

The control register is not implemented, so you cannot alter the port configuration, but this is unlikely to cause any problems as applications usually leave it alone.

32.4.2.2 Port A

Port A is an input port. It has two functions, selected by bit 7 of Port B (PB7). When PB7 is set, Port A returns the following information:

Bit	Description	Implemented?
7	Not used	-
6	Second floppy disk installed	Y
5	Default display mode, bit 1	Y
4	Default display mode, bit 0	Y
3	Not used	-
2	Not used	-
1	Select graphics	Y
0	Unused	-

(The value returned, 00101101 binary, indicates that there is no second floppy disk or 8087 installed, and that the default display mode is CGA 80x25 text.)

When bit 7 of Port B (PB7) is 0, Port A returns the scan code of the last key pressed: this is a non-destructive read.

32.4.2.3 Port B

Port B is an output port, but its current contents can also be read. It is used as follows:

Bit	Effect	Implemented?
7	Controls Port A (see above)	Y
6	Enable keyboard clock	N
5	Prevent parity errors causing NMI	N
4	Disable parity checking	N
3	Undefined	-
2	Control Port C (see below)	Y
1	Enable sound output	Y
0	Gate timer 2 on/off	Y

32.4.2.4 Port C

Port C is an input port which returns the following information:

Bit	Significance		Implemented?
7	Onboard parity error		Y
6	External parity error		Y
5	Output from timer 2		Y
4	Undefined		Y
	If PB2=1	**If PB2=0**	
3	RAM3	0	Y
2	RAM2	0	Y
1	RAM1	0	Y
0	RAM0	RAM4	Y

RAM4..RAM0 define the number of 32 KByte blocks of main memory, minus 2 blocks. (Note that this is the MS-DOS main memory, not including RAM configured for use as RAM disk or EMS memory.)

32.4.3 8253 emulation (timers)

The 8253 is a Prog rammable Interval Timer, used by the IBM PC to implement sound output and system clock. It is implemented as follows:

Address	Description	Implemented?
040H	Timer 0: 18.2 Hz tick	Y
041H	Timer 1: DMA 0 (RAM refresh)	N
042H	Timer 2: tone generator	Y
043H	Control register	Y

32.4.3.1 Control register

The control register controls what effect reading or writing one of the timer registers will have, as follows:

Bit	Effect	Implemented?
7..6	Select timer	Y
5..4	Read/load mode:	Y
	1=read/write LSB	Y
	2=read/write MSB	Y
	3=read/write LSB, then MSB	Y
3..1	Mode:	Y
	0=interrupt on terminal count	N
	1-programmable one-shot	N
	2-rate generator	N
	3=square wave generator	Y
	4=software triggered strobe	N
	5=hardware triggered strobe	N
0	BCD indicator	Y

Note that only mode 3 (square waves) is supported. This is the most commonly used mode.

32.4.3.2 Timer 0

Timer 0 provides the system clock, used for low-level time keeping. Programs can read it or adjust it for their own purposes. Note that the BIOS time of day services use the RTC, which is not affected by the system clock.

32.4.3.3 Timer 1

Timer 1 is not implemented because **Hunter 16** does not use dynamic RAM, so it does not require a refresh interrupt. Any attempt to read this timer will return the current value of timer 0. Any attempt to write to it will be ignored.

32.4.3.4 Timer 2

Timer 2 can be accessed to produce sound directly. Sound output can be turned on and off by using bits 1 and 0 of Port B. The timer 2 output is also fed back to Port C bit 5, so it can be read directly.

32.4.4 8250 emulation (serial)

The 8250 provides an RS232-standard serial port, with the following registers:

Address	Description	Implemented?
3F8H	Buffer/divisor latch LSB	Y
3F9H	Interrupt enable reg/divisor latch MSB	Y
3FAH	Interrupt id register	Y
3FBH	Line control register	Y
3FCH	Modem control register	Y
3FDH	Line status register	Y
3FEH	Modem control register	Y

These addresses are for COM1. COM2 addresses are at 2F8H..2FFH.

Hunter 16 emulates two serial ports, COM1 and COM2: COMI is a full hardware implementation, while COM2 has limited handshaking facilities.

Simple communications is supported directly by the IBM PC BIOS. The **Hunter 16** BIOS provides compatible facilities, plus a number of additional facilities, such as configurable handshaking and communications protocols, via BIOS extension functions (see Chapter 25).

NOTE: Selecting Husky communications changes the serial port emulation, so that it will not generate the expected communications interrupts. This is unlikely to cause problems, as any program that is going to use the interrupts will start off by re-programming the interrupt controller and serial port registers; the **Hunter 16** BIOS will detect this and restore the normal emulation automatically.

32.4.4.1 Main limitations

There are a number of minor differences in the behaviour of the emulation and a true 8250. The main limitations are:

- For COM1, modem status interrupts (other thạn delta RI) are not generated immediately but shortly after the change in status. For COM2 the only interrupt generated is delta CTS, shortly after the change in CTS.
- No 5-bit and 6-bit data
- Parity bit cannot be forced to 1

- No 1.5 stop bit format

(Most of these limitations can be overcome by fitting a communications expansion board option.)

32.4.4.2 Buffering

The 8250 provides transmit and receive buffers, accessed as I/O address 3F8H (COM1) and 2F8H (COM2), while the DLAB bit is set to 0 (bit 7 of the line control register). The state of the buffers is indicated by bits in the line status register.

To transmit a byte, write it to the buffer register. It will be copied to the transmit shift register and transmitted if the transmit shift register empty bit (line status register bit 6) is set. If the shift register is not empty, the byte will be copied to the transmit holding register, if this is empty (bit 5 of the line status register).

When the 8250 has finished transmitting a byte, if there is a byte waiting in the holding register, this will be copied into the shift register and the shift register empty bit will be set to indicate that it is empty.

The data ready bit (bit 0) indicates if there is an unread byte in the receive buffer register. When a byte is received, if this is not set, the byte will be placed in the receive buffer register and the data ready bit will be set. If this bit is set when a byte has been received, the overrun bit will be set.

When the application reads a byte from the receive buffer register, the data ready bit is reset automatically.

32.4.4.3 Divisor latches

The divisor latch for COMI is accessed as I/O address 3F8H (LSB) and 3F9H (MSB), while the DLAB bit is set to 1 (bit 7 of the line control register). The divisor latch for COM2 is at 2F8H and 2F9H.

It contains a 16-bit number which is multiplied by 1.843 and divided by 16 to give the Baud rate. The commonest uses are as follows:

Rate	Latch	Pre-divide
110	1047	7
150	768	7
300	384	6
600	192	5
1200	96	4
2400	48	3
4800	24	2
96000	12	1
19200	6	0

32.4.4.4 Interrupt enable registers

These are write-only registers which are used to enable interrupts, by setting bits as follows:

Bit	Description	Implemented?
7	Not used	-
6	Not used	-
5	Not used	-
4	Not used	-
3	Modem status	Y
2	Receive line status	Y
1	Transmit holding register empty	Y
0	Data available	Y

32.4.4.5 Interrupt id registers

When an RS232 interrupt has occurred, read the interrupt id registers and bits 2..0 indicate the source as follows:

Value	Significance	Clear by reading
0	Modem status	Modem status register
1	No interrupt	-
2	Transmit register empty	Line status register
4	Data available	Receive buffer
6	Line status	Interrupt id register (or write to Tx register)

32.4.4.6 Line control registers

These are output registers, used to control the following details:

Bit	Effect	Implemented?
7	Access divisor latch	Y
6	Set break	N
5	Stick parity (set to NOT bit 4)	N
4	Select even parity	Y
3	Enable parity	Y
2	Stop bits (0=1, 1-2 bits)	Y
1..0	Word length:	
	00=5 bits	N
	01=6 bits	N
	10=7 bits	Y
	11=8 bits	Y

If you select 5-bit or 6-bit data, it will be interpreted as 7-bit data.

The parity bits are interpreted as follows:

Enable	Even	Stick	Parity bit (even data)	Parity bit (odd data)
0	0	0	0	0
0	0	1	0	0
0	1	0	0	0
0	1	1	0	0
1	0	0	1	0
1	0	1	1	1
1	1	0	0	1
1	1	1	1	1

Note that if you enable parity and 'stick' it, the parity bit is 1 regardless of the ‘Even' setting.

32.4.4.7 Modem control registers

These are an output registers, used to control the following details:

Bit	Effect if set	Implemented? (COM1)	Implemented? (COM2)
7	Unused	-	-
6	Unused	-	-
5	Unused	-	-
4	Enable Loop back	N	N
3	Out 2	Y	Y
2	Out 1	N	N
1	Enable RTS	Y	N
0	Enable DTR	Y	Y

32.4.4.8 Modem status registers

These are input registers, whose contents should be interpreted as follows:

Bit	Significance if set	Implemented? (COM1)	Implemented? (COM2)
7	Receive line signal detect (DCD)	Y	N
6	Ring Indicator (RI)	Y	N
5	Data set ready (DSR)	Y	N
4	Clear to send (CTS)	Y	Y
3	Delta Rx line signal detect	Y	N
2	Trailing edge ring indicator (RI)	Y	N
1	Delta DSR	Y	N
0	Delta CTS	Y	Y

Note that COM2 always returns DCD and DSR as active and the other flags as inactive.

32.4.4.9 Line status registers

These are input registers, whose contents should be interpreted as follows:

Bit	Significance if set	Implemented?
7	Unused	-
6	Transmit shift register empty	Y
5	Transmit holding register empty	Y
4	Break interrupt	Y
3	Framing error	Y
2	Parity error	Y
1	Overrun error	Y
0	Data ready	Y

32.4.5 Parallel printer port

Hunter 16 does not provide or emulate a parallel printer port; all printing is via serial ports. (See section 32.4'4 for details.)

32.4.6 8237 emulation (DMA controller)

Hunter 16 does not provide or emulate a DMA controller; all access to DMA controller hardware is ignored.

32.4.7 8259 emulation (Interrupt controller)

The 8259 interrupt controller is normally used in single stage mode, assigning priorities to interrupts and vectoring up to eight devices, as follows:

Level	IBM PC usage	Hunter 16 usage
7	18.2 Hz timer	Timer
6	Keyboard	Keyboard
5	RTC	Not used
4	COM2	COM2
3	COM1	COM1
2	HDC	Not used
1	FDC	Not used
0	Parallel printer	Not used

The 8259 can be accessed in three ways:

- Initialisation command words
- Operation command words
- Status words

32.4.7.1 Initialisation command words

An initialisation command word (1CW) is a sequence of up to four bytes, issued by writing the first byte to I/0 address 020H with bit 4 set, and writing the other bytes to 021H. ICWs are normally tied in very closely with the hardware configuration, which is fixed on **Hunter 16**, so they will be ignored and the emulator will be configured as on a standard IBM PC:

- 8086 operation
- Single level (not cascaded)
- Normal fully nested (not special)
- Edge-triggered
- Buffered mode - slave
- Normal EOI (not auto)
- Fixed priority (0 highest, 7 lowest)

32.4.7.2 Operation command words

There are three operation command words, which applications use at any time: OCW1, OCW2, and OCW3.

OCWI is used to set the interrupt mask. This is issued by writing the a byte to 021H with bits set to mask interrupts, as follows:

Bit	Effect if set	Implemented?
7	Mask level 7	Y
6	Mask level 6	Y
5	Mask level 5	Y
4	Mask level 4	Y
3	Mask level 3	Y
2	Mask level 2	Y
1	Mask level 1	Y
0	Mask level 0	Y

OCW2 is used to report the end of an interrupt service routine or alter interrupt priorities. This is issued by writing a byte to 020H as follows:

Bit	Effect if set	Implemented?
7	Rotate priorities	N
6	Specific	N
5	End of interrupt	Y
4	Must be 0	-
3	Must be 0	-
2	Level bit 2	N
1	Level bit 1	N
0	Level bit 0	N

ie facilities to change interrupt priorities are not supported (they are not really necessary, as internal hardware expansion is limited and strictly controlled).

OCW3 is also written to 020H. It is used to set special mask mode, issue a poll command, or select ISR/IRR on read from 020H:

Bit	Effect if set	Implemented?
7	0	-
6	Set special mask mode to bit 5	N
5	0 or 1 special mask mode	N
4	Must be 0	-
3	Must be 1	-
2	Poll command	N
1	Set RIS state to bit 0	Y
0	0 or 1= new RR state	Y

ie special mask mode and polling are not supported.

Note that OCW2 and OCW3 are distinguished by the settings of bits 4 and 5.

32.4.7.3 Status words

Three status words can be read from the 8259, as follows:

- The IMR (interrupt mask register) can be read by reading 021H. It returns the current interrupt mask (ie as set by OCW1).
- The IRR (interrupt request register) can be read by resetting the RIS bit using OCW3 and reading 020H. (It will also be returned if OCW3 has not yet been used.) A bit is set in it for each interrupt that has occurred.
- The ISR (in service register) can be read by setting the RIS bit with OCW3, then reading 020H. A bit is set in it for each interrupt if that interrupt has occurred and is not masked off.

When an interrupt service routine issues an EOI, the corresponding bits in the ISR and IRR are reset.

All three status words are fully supported.

32.4.8 Disk controllers

The **Hunter 16** disk controller hardware is quite unlike that used on the IBM PC, so the IBM PC FDC and HDC are not emulated. This is only likely to affect copy-protection schemes that access the controller directly and utilities that use special disk formatting; most other programs use MS-DOS for disk access!

Any attempts to access the IBM PC disk controller hardware directly will be ignored.